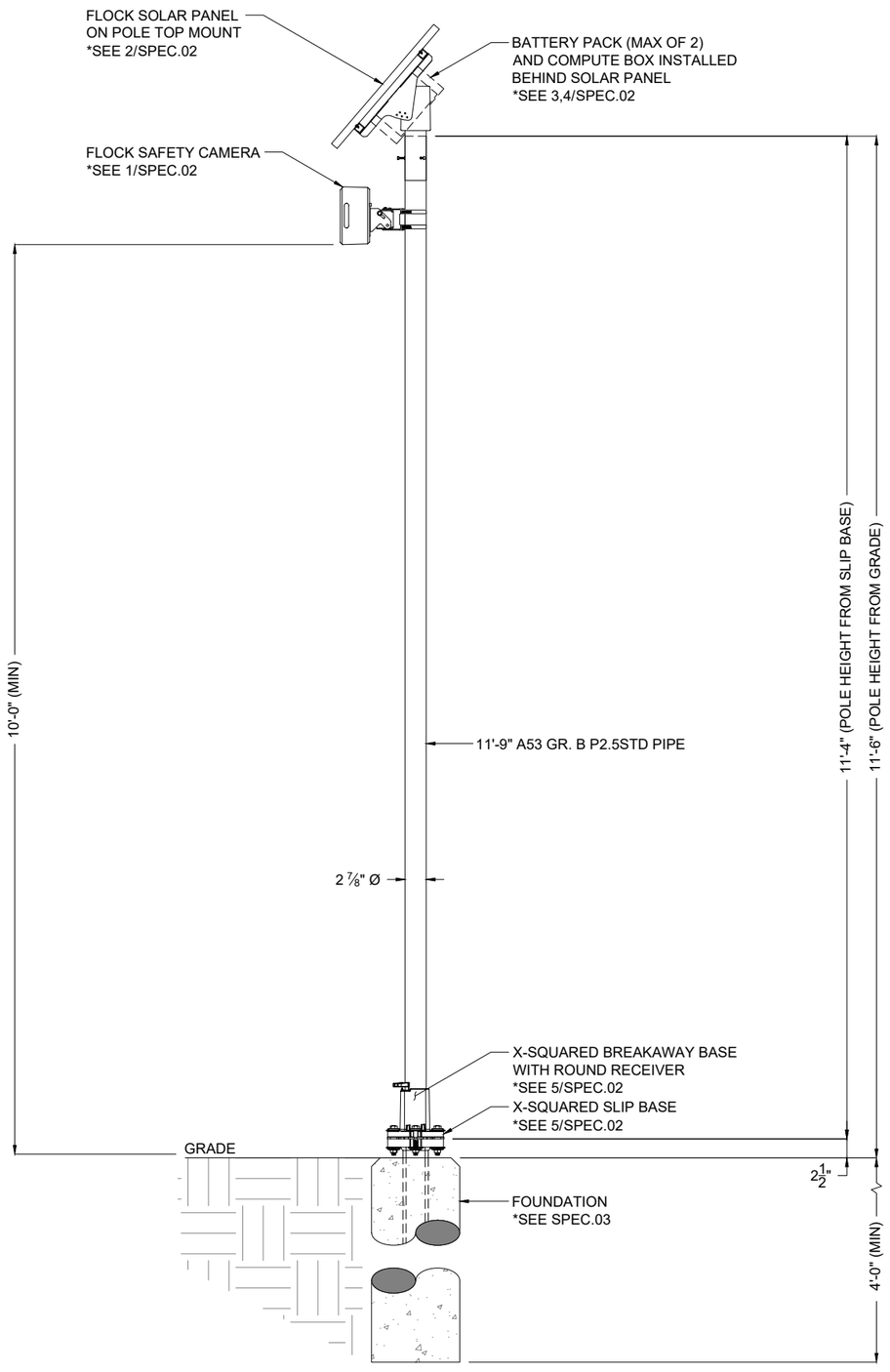

1 POLE ELEVATION DETAIL

SCALE: 1:20

DESIGN NOTES

1. POLE AND FOUNDATIONS ARE DESIGNED IN ACCORDANCE WITH THE FOLLOWING CODES:
   1.1. 2023 FLORIDA BUILDING CODE, 2021 INTERNATIONAL BUILDING CODE
   1.2. AASHTO LRFD SPECIFICATIONS FOR STRUCTURAL SUPPORT FOR HIGHWAY SIGNS, LUMINAIRES AND TRAFFIC SIGNALS LATEST EDITION.
   1.3. CERTAIN SECTIONS OF THE SPECIFICATIONS ABOVE ARE SUPERCEDED/MODIFIED BY "FDOT MODIFICATIONS TO LRFDLTS-1" THIS CAN BE FOUND AT THE FOLLOWING HYPERLINK (CLICK HERE FOR FDOT MODIFICATIONS TO LRFDLTS-1)
   1.4. FDOT STANDARD SPECIFICATIONS 700-3.1
2. POLE ANALYSIS AND FOUNDATION DESIGN ARE BASED ON THE FOLLOWINGCRITERIA
   2.1. DESIGN WIND SPEED (Vult)): 110 MPH
   2.2. RISK CATEGORY: II
   2.3. EXPOSURE CATEGORY: C
   2.4. TOPOGRAPHIC CATEGORY: 1
   2.5. SEISMIC DESIGN CRITERIA:
      2.5.1. SOIL SITE CLASS: D (ASSUMED)
      2.5.2. SPECTRAL RESPONSE, Ss: 1.000g (MAXIMUM)
      2.5.3. SPECTRAL RESPONSE, S1: 0.400G (MAXIMUM)
      2.5.4. SEISMIC DESIGN CATEGORY: B
   2.6. SHOULD ANY OF THE SITE-SPECIFIC PARAMETERS BE HIGHER THAN WHAT IS NOTED ABOVE, THE EOR SHALL BE CONTACTED TO PROVIDE A REVISED DESIGN.
3. CONTRACTOR IS RESPONSIBLE FOR VERIFYING SOIL CONDITIONS PRIOR TO INSTALLATION.
4. FOUNDATION TO CONSIST OF CONCRETE SURROUNDING THE PROPSED POLE WITH A MINMUM OF 3,000-PSI COMPRESSIVE STRENGTH.

GENERAL & CONSTRUCTION NOTES

1. CONTRACTOR SHALL CONTACT DESIGNATED AGENCY TO LOCATE ALL UNDERGROUND UTILITIES PRIOR TO CONSTRUCTION.
2. CONTRACTOR SHALL APPLY AND OBTAIN AN APPROVED TRAFFIC CONTROL PLAN IN ACCORDANCE WITH MUTCD AND LOCAL JURISDICTION STANDARDS.
3. CONTRACTOR SHALL RESTORE ALL DISTURBED AREAS TO ORIGINAL SITE CONDITION TO THE SATISFACTION OF STATE DEPARTMENT OF TRANSPORTATION AND LOCAL JURISDICTION.
4. ALL WORK SHALL CONFORM TO APPLICABLE ELECTRICAL CODES EXCEPT WHEN STATE DEPARTMENT OF TRANSPORTATION OR LOCAL JURISDICTION STANDARDS SUPERSEDE.
5. ALL CONSTRUCTION SHALL BE IN ACCORDANCE WITH SPECIFICATIONS DEFINED BY THE STATE DEPARTMENT OF TRANSPORTATION OR LOCAL JURISDICTION, UNLESS SPECIFICALLY STATED OR SHOWN OTHERWISE HEREIN.

ADA COMPLIANCE NOTES

1. ALL SIDEWALK CONSTRUCTION SHALL BE IN ACCORDANCE WITH ADA TITLE II, STATE DEPARTMENT OF TRANSPORTATION, AND LOCAL JURISDICTION STANDARDS,
2. STATE DEPARTMENT OF TRANSPORTATION CURRENT EDITION STANDARDS SHALL BE USED FOR PEDESTRIAN CONTROL PLANS WHEN CLOSURE OF SIDEWALK IS REQUIRED FOR CONSTRUCTION.
3. MINIMUM CLEAR PEDESTRIAN ACCESS ROUTE (PAR) SHALL BE 48" WIDE.
4. NO OBSTRUCTION IS PERMITTED ALONG THE WIDTH OF THE SIDEWALK. UP TO AN ELEVATION OD 7'-0" ABOVE GRADE.

TYPICAL DETAIL

FLOCK SAFETY CAMERA ON
X2 REDI-TORQUE POLE - CONCRETE
FOUNDATION

flock safety
1170 HOWELL MILL ROAD SUITE 210
ATLANTA, GA 30318

REV	DATE	BY	DESCRIPTION
-	-	-	-
-	-	-	-
-	-	-	-
-	-	-	-
0	07/07/2025	JMW	TYP. DETAIL

FLOCK SAFETY EQUIPMENT
INSTALLATION

TYPICAL DETAILS

SHEET:	REV:
SPEC.01	0

THE INFORMATION CONTAINED IN THIS DRAWING IS THE SOLE PROPERTY OF FLOCK SAFETY. ANY REPRODUCTION IN PART OR IN WHOLE WITHOUT THE WRITTEN PERMISSION OF FLOCK SAFETY IS PROHIBITED. DO NOT SCALE DRAWINGS.

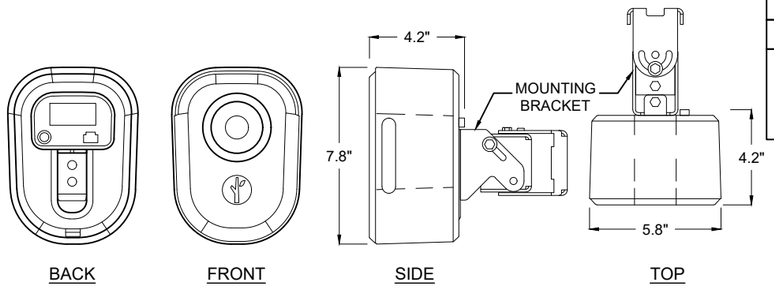

SUPPLIED BY FLOCK SAFETY MODEL 706-0002
WEIGHT: 3.5 LB
MOUNTING HARDWARE: MCMASTER-CARR QUICK-RELEASE CLAMP PART #: 5322K58 OR AN APPROVED EQUIVALENT

1 FLOCK SAFETY CAMERA

SCALE: N/A

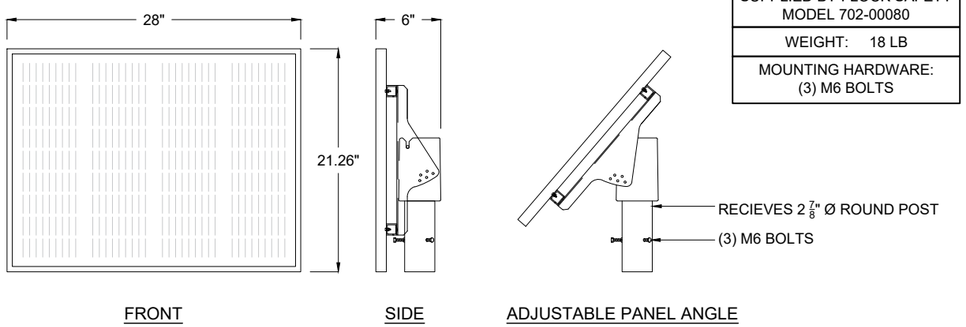

SUPPLIED BY FLOCK SAFETY MODEL 702-00080
WEIGHT: 18 LB
MOUNTING HARDWARE: (3) M6 BOLTS

2 65 WATT SOLAR PANEL AND MOUNT ASSEMBLY (TOP MOUNTED)

SCALE: N/A

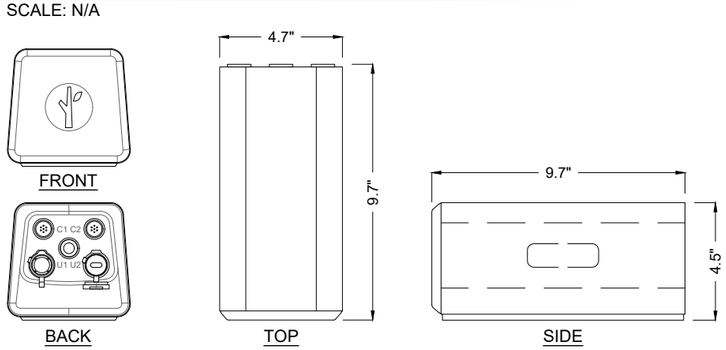

SUPPLIED BY FLOCK SAFETY MODEL 705-0002
WEIGHT: 5.9 LB
MOUNTING HARDWARE: FLOCK MOUNTING BRACKET MODEL 204-00101 MCMASTER-CARR QUICK-RELEASE CLAMP PART #: 5322K58 OR AN APPROVED EQUIVALENT

3 FLOCK EXTERNAL BATTERY

SCALE: N/A

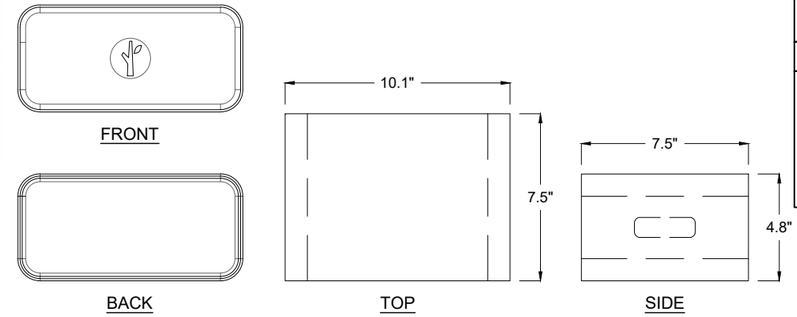

SUPPLIED BY FLOCK SAFETY MODEL 705-0002
WEIGHT: 4.6 LB
MOUNTING HARDWARE: FLOCK MOUNTING BRACKET MODEL 204-00102 MCMASTER-CARR QUICK-RELEASE CLAMP PART #: 5322K58 OR AN APPROVED EQUIVALENT

4 FLOCK COMPUTE BOX

SCALE: N/A

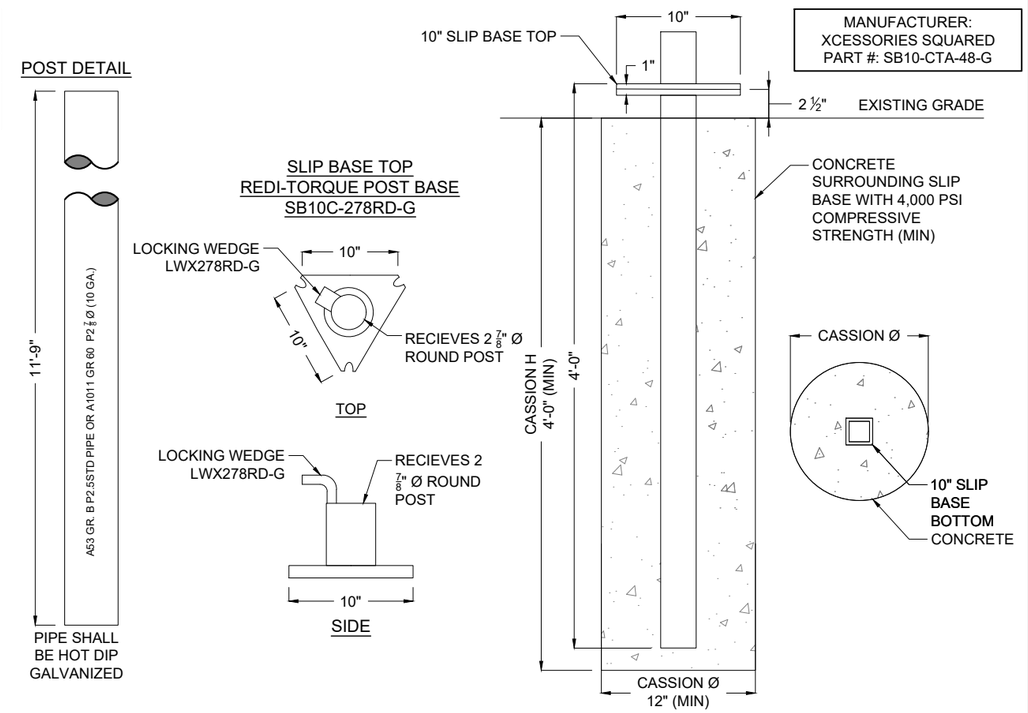

MANUFACTURER: XCESSORIES SQUARED PART #: SB10-CTA-48-G

5 CONCRETE CASSION BREAKAWAY POLE BASE (SEE SPEC.03)

SCALE: N/A

TYPICAL DETAIL

FLOCK SAFETY CAMERA ON X2 REDI-TORQUE POLE - CONCRETE FOUNDATION

flock safety
1170 HOWELL MILL ROAD SUITE 210
ATLANTA, GA 30318

REV	DATE	BY	DESCRIPTION
-	-	-	-
-	-	-	-
-	-	-	-
-	-	-	-
0	07/07/2025	JMW	TYP. DETAIL

FLOCK SAFETY EQUIPMENT INSTALLATION

TYPICAL DETAILS	
SHEET: SPEC.02	REV: 0

THE INFORMATION CONTAINED IN THIS DRAWING IS THE SOLE PROPERTY OF FLOCK SAFETY. ANY REPRODUCTION IN PART OR IN WHOLE WITHOUT THE WRITTEN PERMISSION OF FLOCK SAFETY IS PROHIBITED. DO NOT SCALE DRAWINGS.

INSTALLATION GUIDE **REDI-TORQUE MODEL 280** OMNI DIRECTIONAL SLIP BASE
(COMBINATION ANCHOR WITH LOWER SLIP PLATE). RECEIVES ROUND SIGN SUPPORT

XCESSORIES SQUARED Development & Manufacturing Inc.

RT280U-RD1	MASH-16 COMPLIANT FOR INTERSECTIONS and MAINLINE ROADWAYS NCHRP 350 CRITERIA - FHWA ACCEPTANCE LETTERS SS-134 & SS-134A	November 15, 2022	XCESSORIES SQUARED DEV. & MFG. CO., INC. AUBURN, IL 62615 TEL: (800) 621-7948 FAX: (217) 438-3917 www.x-sqrd.com

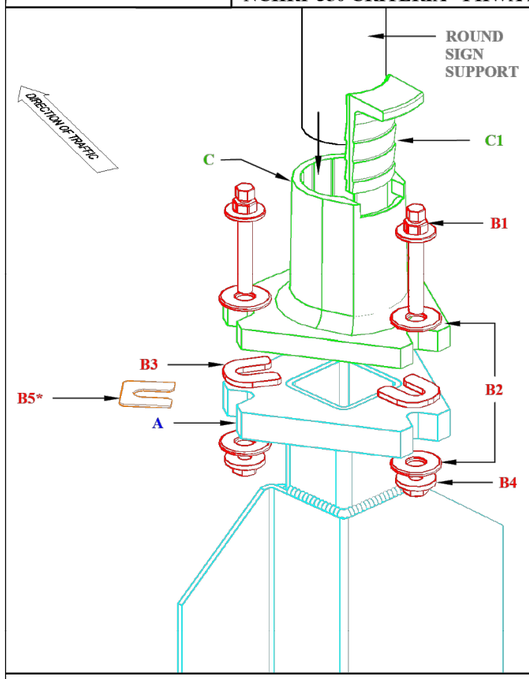

PARTS LIST

A: Unibase - Lower Slip Plate

ITEM	QTY	DESCRIPTION
A	1	Combination Anchor/Lower Slip Plate

B: Redi-Torque Match Plate Hardware

ITEM	QTY	DESCRIPTION
B1	3	½"-13 x 3" Gr. 8 Redi-Torque Bolt
B2	6	5/8" U.S.S. Flat Washer
B3	3	3/16" thick, Teflon Coated Slip Washer
B4	3	½"-13 Gr. 8 large diameter Flange Nut
B5*	0	1/16" thick Leveling Shim

* may not be necessary for every installation

C: Upper Slip Plate Sub-Assembly

ITEM	QTY	DESCRIPTION
C	1	Top Receiver for Round Sign Support
C1	1	Round Sign Support Locking Wedge

STEP A

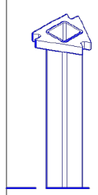

1. Install appropriate Unibase **(A)** plumb & squared up with road, with point of triangular slip plate facing oncoming traffic.

2. Depth of embeddment to leave 2-½" (+1½/-½") from grade to top of Lower Slip Plate of Unibase **(A)**.
   NOTE: *For soil or concrete installation options, see details at lower left.*
   NOTE: *If installing in concrete, auger the footing hole shallow enough to be able to drive 3-4 inches of Unibase* **(A)** *into the bottom of the hole. This will help stabilize the unit as concrete is being poured and cured while also allowing for proper drainage.*
   NOTE: *On multi-leg installations, be sure that all Unibases are squared & lined up with each other.*

STEP B

1. Place one each teflon coated Slip Washer **(B3)** on top of Lower Slip Plate of Unibase **(A)** at each notched point with open end of slot facing center of triangular slip plate. Leave enough room between the closed ends of the slot/notch to allow Ø½" Redi-Torque Bolt **(B1)** to pass through.

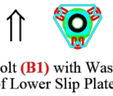

2. Place Upper Slip Plate **(C)** onto the three Slip Washers **(B3)** properly indexed so that the round post receiver notched portion is pointing toward oncoming traffic.
3. Slide 1 each ⅝" Flat Washer **(B2)** on to each Redi-Torque Bolt **(B1)** then insert Bolt **(B1)** with Washer **(B2)** down through notched points of Upper Slip Plate **(C)**, slot of Slip Washer **(B3)** and notched point of Lower Slip Plate of Unibase **(A)**.
4. Slide 1 each ⅝" Flat Washer **(B2)** up on exposed thread of each Bolt **(B1)** followed by threading 1 each ½" Flange Nut **(B4)** on to each Bolt **(B1)** as tight as can reasonably be attained using *the ¾" (larger) hex and* ***NOT*** *the 9/16" (smaller) hex.*

STEP C

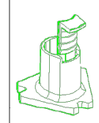

1. Insert Round Sign Support into Upper Slip Plate **(C)** top receiver until support bottoms out.
2. With a hand held hammer, drive the round sign support Locking Wedge **(C1)** into the Slip Base Top **(C)** receiver at the pre-determined notch. (The Locking Wedge does not need to be driven flush with top of Upper Slip Plate receiver)

   ***SHIMMING:** Before moving on to **step 3,** check the plumb of the sign support(s). If necessary, 1/16" thick Leveling Shim(s) **(B5)** may be used at the appropriate point(s) between slip plates. To re-plumb, loosen Bolt **(B1)** at desired point enough to lean the Upper Slip Plate **(C)** back and slide Leveling Shim **(B5)** into place. Shim(s) should be placed under Teflon Coated Slip Washer. *Maximum of 2 each Leveling Shims per notched point.*
3. After Locking wedge **(C1)** is securely in place. loosen each Bolt **(B1)** and Nut **(B4)**, one at a time, then retighten each Bolt **(B1)**, using the 9/16" (smaller) hex, until the 9/16" hex head twists off from the ¾" hex head. This will set the proper torque level of 52 ft-lbs.

1. **UP TO A MAXIMUM OF THREE OMNI DIRECTIONAL SLIP BASES WITH REDI-TORQUE MODEL 280 MATCHPLATE HARDWARE MAY BE INSTALLED WITHIN A SEVEN FOOT SPAN ON MAINLINE ROADWAY.**
2. **FOR ADDITIONAL WINDLOAD CAPABILITY, A HEAVIER GAUGE POST MAY BE USED.**

CONCRETE INSTALLATION DETAIL

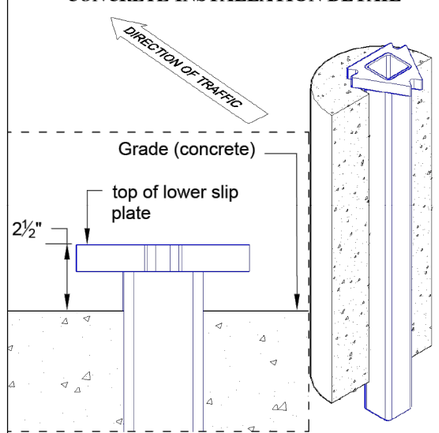

NOTE: Recommended footing size a minimum of 12" in diameter and 30" deep.

DIRECT DRIVEN *SOIL* INSTALLATION DETAIL

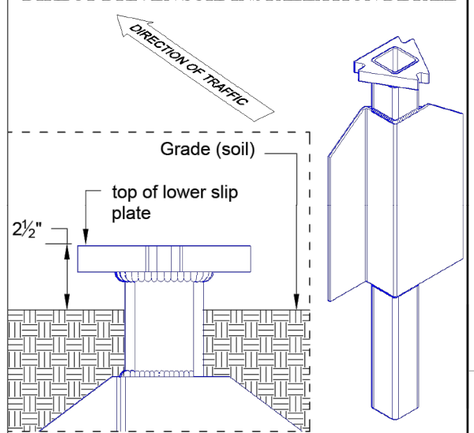

NOTE: Install with the widest bearing surface of the stabilizing wing parallel with the face of the sign.

INSTALLED VIEW (FRONT)

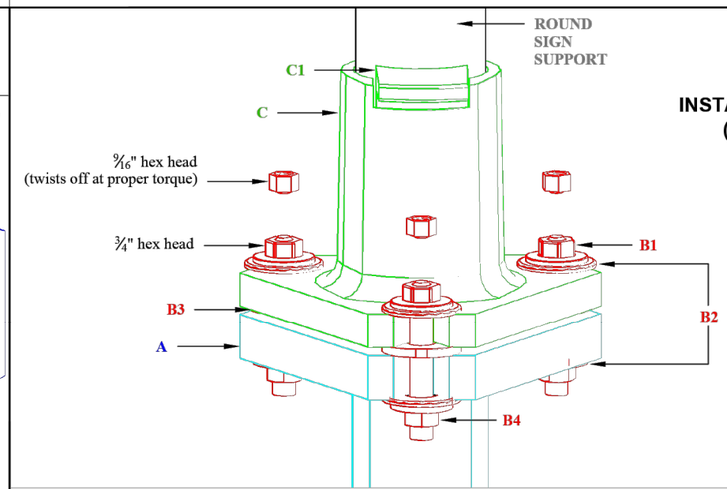

REINSTALLATION PROCEDURE:

NOTE: All match plate hardware components are generally reusable except the Redi-Torque Bolts **(B1)**

1. Remove sign support Locking Wedge **(C1)** from Upper Slip Plate**(C)** receiver with a hand held hammer.
2. Place Upper Slip Plate**(C)** on Lower Slip Plate of Unibase **(A)** to check for warpage and level of slip plates.
3. Visually check all welds and castings for fractures or other damage.
4. When assured both Lower Slip Plate **(A)** and Upper Slip Plate **(C)** are reusable employ new or reused hardware **(B)** with NEW Redi-Torque Bolts **(B1)** then follow installation procedures, starting with **STEP B**.

TYPICAL DETAIL

FLOCK SAFETY CAMERA ON X2 REDI-TORQUE POLE - CONCRETE FOUNDATION

flock safety
1170 HOWELL MILL ROAD SUITE 210
ATLANTA, GA 30318

REV	DATE	BY	DESCRIPTION
-	-	-	-
-	-	-	-
-	-	-	-
-	-	-	-
0	07/07/2025	JMW	TYP. DETAIL

FLOCK SAFETY EQUIPMENT INSTALLATION

TYPICAL DETAILS	
SHEET: SPEC.03	REV: 0

THE INFORMATION CONTAINED IN THIS DRAWING IS THE SOLE PROPERTY OF FLOCK SAFETY. ANY REPRODUCTION IN PART OR IN WHOLE WITHOUT THE WRITTEN PERMISSION OF FLOCK SAFETY IS PROHIBITED. DO NOT SCALE DRAWINGS.